dalmec
Balancersystemen

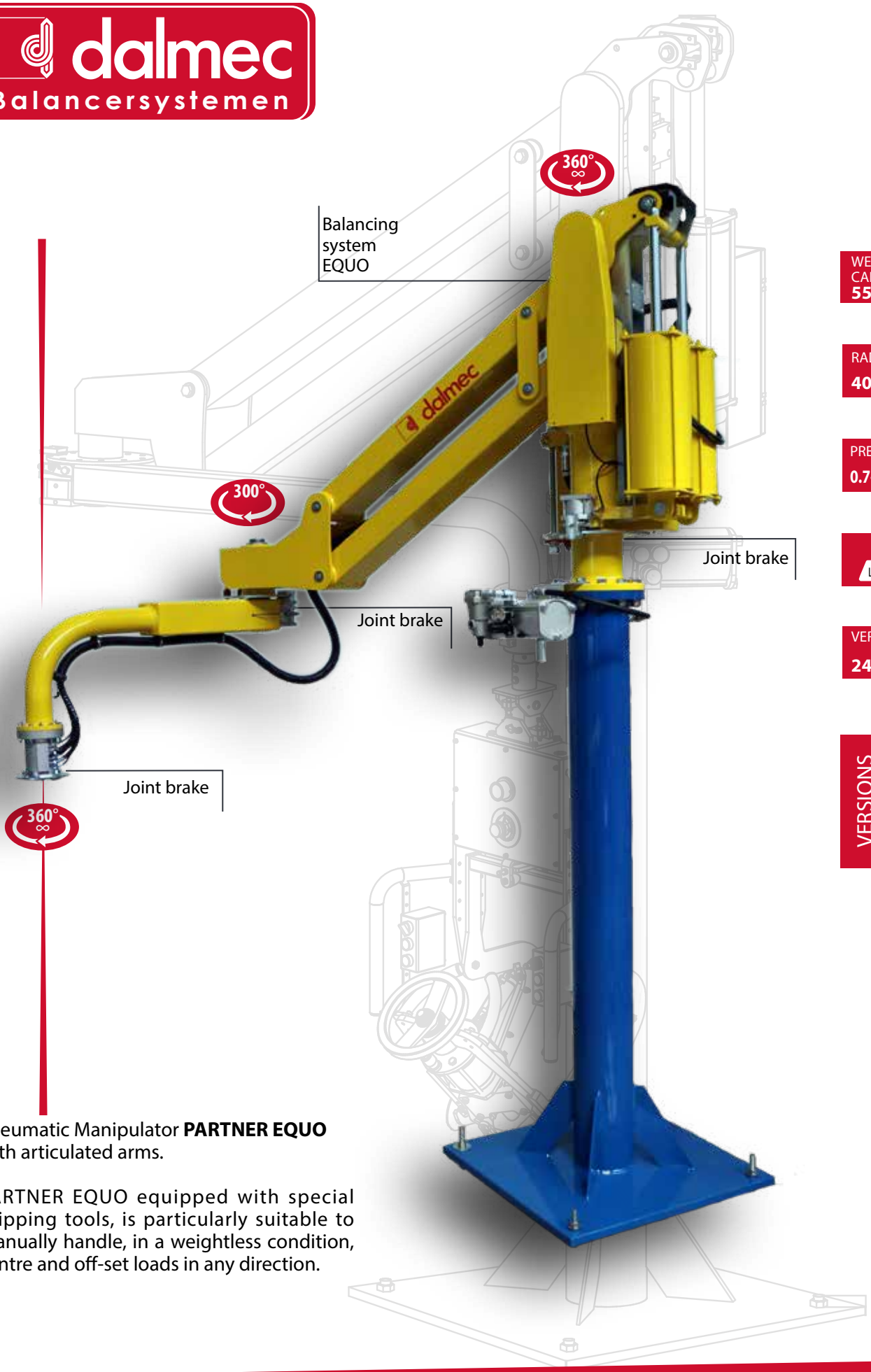

WEIGHT CAPACITY **550 Kg**

RADIUS **4000 mm**

PRESSURE **0.7-0.8 Mpa**

LOAD **OFF-SET**

VERTICAL LIFT **2450 mm**

VERSIONS
- COLUMN
- FIXED OVERHEAD
- RUNNING OVERHEAD

Pneumatic Manipulator **PARTNER EQUO** with articulated arms.

PARTNER EQUO equipped with special gripping tools, is particularly suitable to manually handle, in a weightless condition, centre and off-set loads in any direction.

PARTNER EQUO® - PE

PARTNER EQUO®- PE

Partner column mounted - PEC

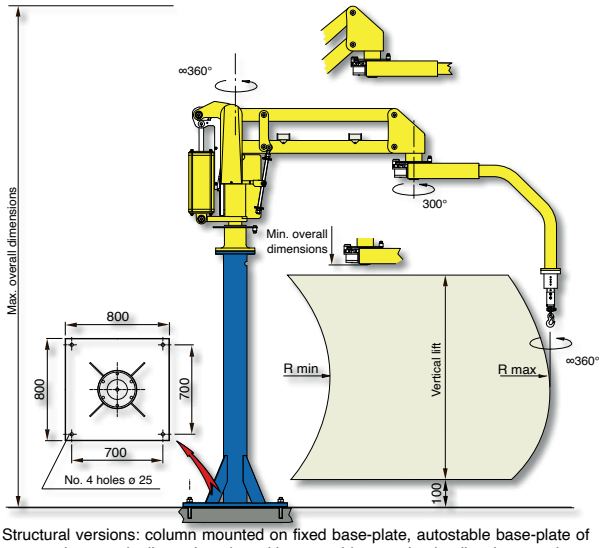

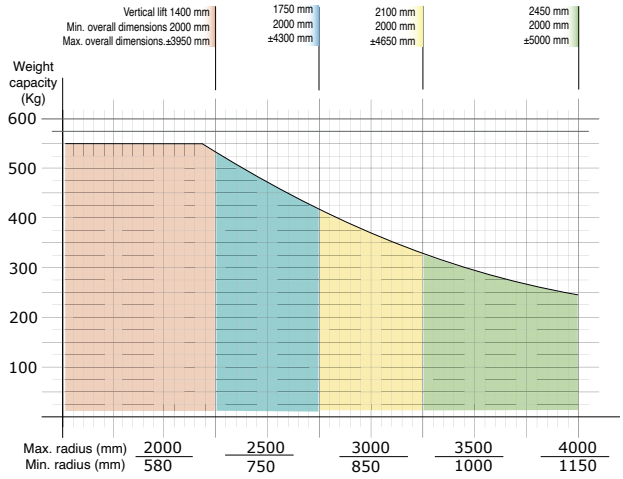

Structural versions: column mounted on fixed base-plate, autostable base-plate of our supply properly dimensioned or with autostable motorised trolley that translates on a simple profile track on the floor.

Partner overhead mounted - PEF

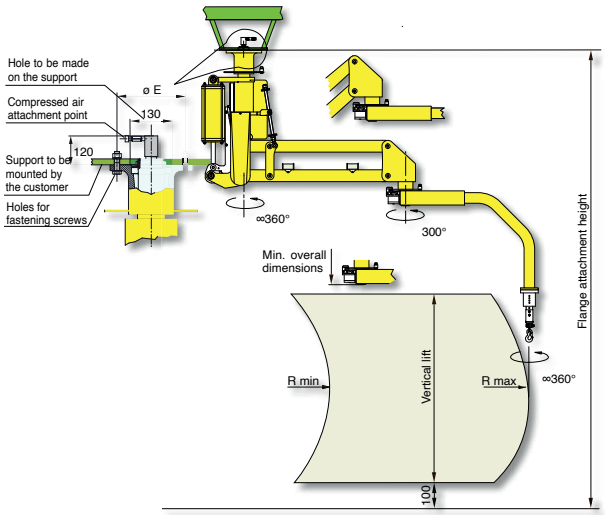

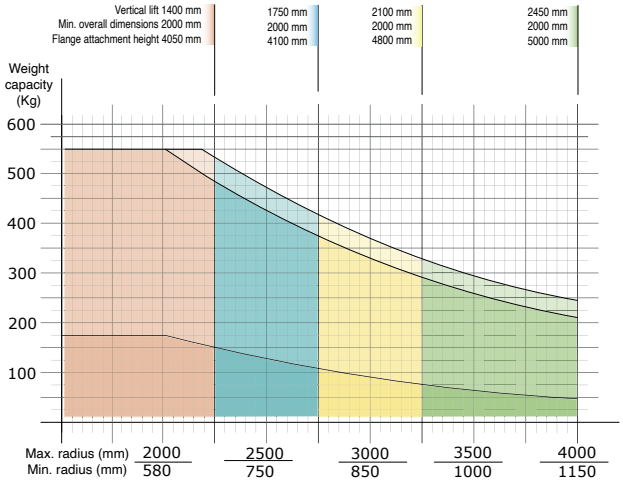

Configuration and measurements may change upon the Customer's specific requirements

Partner overhead trolley mounted - PES

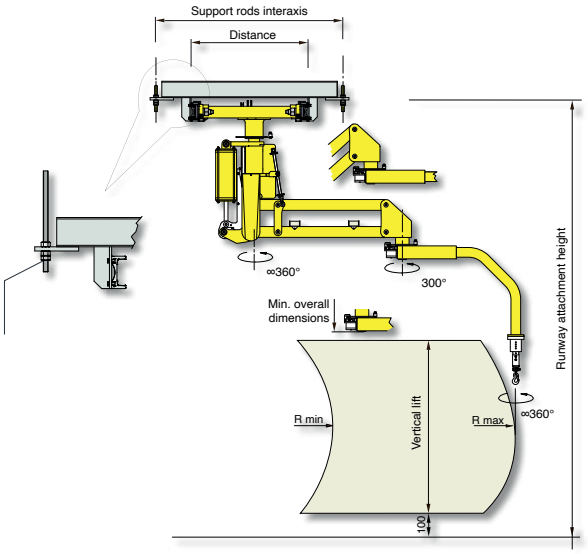

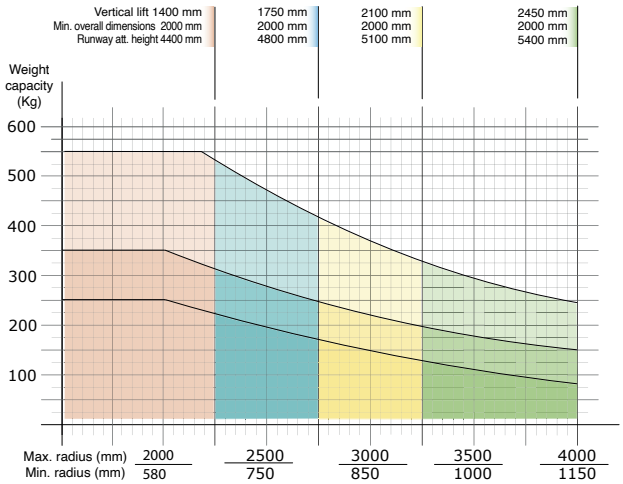

Air supply: dry and oil-free compressed air min. constant 0.7÷0.8 MPa

Dalmec BV
Duurzaamheidsring 20
4231 EX MEERKERK

Tel: 0345-636050
Fax: 0345-636055

info@dalmec.nl
www.dalmec.nl

Copyright © 2017 by Dalmec S.p.A Technical data and measures are indicative only and not binding. Dalmec reserves the right to make changes, at any time without notice.

SC.09 ED.1
10-04-2017